IPC341E-VIR(-Z) 720P Fixed Dome IP Camera

Key Features

Optics

- Automatic day and night with removable IR-cut filter(ICR)
- Built-in motorized lens for remote zoom and autofocus
- Smart-IR technology for adaptive IR illumination, to enhance the image at night
- 30 m (98 ft) IR LED
- 3D noise reduction

Compression

- H.264 High Profile to deliver a high video compression efficiency
- Triple streams to meet the different requirements for bandwidth and frame rate
- ROI (Region of Interest) to improve image quality of the key area for a low-bandwidth network
- 9:16 corridor format to double the effective surveillance area longitudinally
- Customized OSD to provide multiple fonts including crochet and outline fonts

Network

- NAA (Network Auto-Adaptability) technology to secure effective surveillance even with network packet loss
- UNP(Universal Network Passport) patented technology for NAT traversal
- Dual direct-to-iSCSI data block storage
- ONVIF Conformance

Structure

- Built-in PoE splitter
- IK10 vandal resistant

- IP66-rated

Specifications

Camera	IPC341E-VIR-IN	IPC341E-VIR-Z-IN
Sensor	1/3", 1.3Megapixel, progressive scan, low illumination CMOS	
Lens	3 to 10.5 mm, F1.4	2.8 to 12 mm, F1.4
Zoom/Focus	Manual	Motor drive
Angle of View (H)	91.2° (wide) to 25.5° (tele)	90° (wide) to 28° (tele)
Day/Night	IR-cut filter with auto switch (ICR)	
Image Mirroring	Enable/Disable	
IR	Smart-IR ,30m (98 ft) IR range	
Video		
Maximum Resolution	1280 × 960	
Video Compression	H.264 High Profile	
Frame Rate	960P (1280*960) 30 fps; 720P (1280*720) 30 fps; D1 (720*576) 25 fps	
Video Streaming	Triple	
OSD	3 Groups of OSD：Time OSD，Name OSD(up to 8)，customized OSD	
Privacy Mask	Up to 8 areas	
Audio		
Audio Compression	G.711	
Two-way Talking	Support	
Storage		
Edge Storage	Micro SD, Up to 32 GB	
Back-end Storage	Dual direct-to-iSCSI data block storage	
Cache Post Recording	Support	
Interface		
Audio I/O	3.5 mm audio interface	
	Input: impedance 35 kΩ; amplitude 2 V [p-p]	
	Output: impedance 600 Ω; amplitude 2 V [p-p]	
Alarm I/O	2 alarm inputs and 1 alarm output	
	Support for alarm-triggered actions	
Serial Port	1 RS485	
Network	1 10M/100M Base-TX Ethernet	
Video Output	1 BNC, impedance 75 Ω; amplitude 1 V [p-p]	
Power Supply	12 V DC (2-pin connectors)	
General		
Power	9 ~ 12 V DC, or PoE (IEEE802.3 af)	
	Power consumption: 3.7 W (IR 3 W)	
Dimensions (Ø x H)	Φ149 x 105 mm (Ø5.9" x 4.1")	
Weight	0.75 kg (1.7 lb)	
Operating Conditions	-20°C ~ +60°C (-4°F ~ 140°F), Humidity ≤ 90% RH(non-condensing)	
Vandal Resistant	IK10	

Ingress Protection	IP66

Dimensions

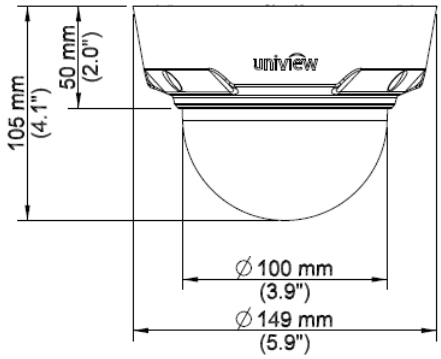

Installation

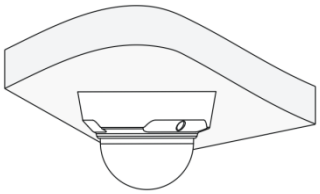

Ceiling mount

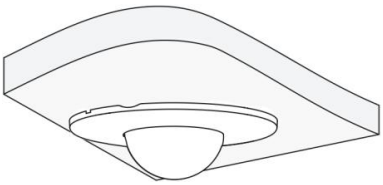

In-ceiling mount

Accessories

Installation mode	Accessories	Description
Ceiling mount	Mounting pedestal is included in the Product package	Ceiling
In-ceiling mount	AE-TR-FM152 bracket	In-ceiling

Zhejiang Uniview Technologies Co., Ltd.

South Tower, Building 10, Wanlun Science Park, 88 Jiangling Road, Hangzhou, P.R.China 310051

Email：overseasbusiness@uniview.com; globalsupport@uniview.com

http://www.uniview.com

©2013 Zhejiang Uniview Technologies Co., Ltd. All rights reserved.

*Product specifications and availability are subject to change without notice.